Model code : CST_10XA036ST008
Print date: 27/04/2016
Last updated: 27/04/2016

**Prepared for :**

# T 520.18 HIGHCAB 4X2 T E6 (LHD) - GVW 19.00 T / GCW 50.00

## RENAULT TRUCKS
## T HIGH 520

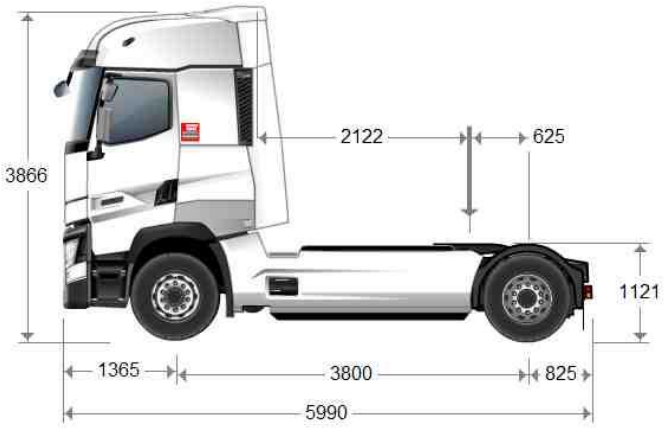





## WEIGHTS

| Wheelbase | | mm | 3.800 |
|---|---|---|---|
| Maximum Weight (registered) | Total (GVW) | Kg | 19000 |
| Payload | (C) | Kg | 10688 |
| Maximum Weight (registered) | Front axle 1 | Kg | 7500.00 |
| | rear axle 1 | Kg | 11500 |
| Min. weight complete vehicle unladen | Front axle(s) | Kg | 5974.00 |
| Kerb Weight | total | Kg | 8312 |
| Chassis cab kerb weight | Front Axle 1 | Kg | 5805.00 |
| | Rear Axle 1 | Kg | 2507.00 |
| Total vehicle weight under full load at YMIN | Front axle(s) | Kg | |
| | Rear axle(s) | Kg | |
| Total vehicle weight under full load at YMAX | Front axle(s) | Kg | |
| | Rear axle(s) | Kg | |

*To maintain the driving comfort (lightness of steering, braking) of vehicles in all load and driving conditions once the vehicle is bodied, the following minimum axle load(s) must be respected: A value corresponding to 29% of the weight of the unladen bodied vehicle kerb weight (with driver, without passenger)*
*This table includes the weights of the RENAULT TRUCKS options: full urea tank, oil, screen wash fluid and coolant at 100%, fuel fill level 90% and driver present (75kg).*

## LENGTHS

| Wheelbase | | mm | 3.800 |
|---|---|---|---|
| Front Overhang | (H / BEP L016) | mm | 1365 |
| Wheelbase | (F / BEP L011) | mm | 3800 |
| Rear overhang | Chassis | mm | 825 |
| Centre of Gravity of vehicle | at X (BEP L044) | mm | 1157.00 |
| Overall Chassis Length | (A / BEP L032+L016) | mm | 5990 |

## HEIGHTS

| Wheelbase | | mm | 3.800 |
|---|---|---|---|
| Ground clearance, laden | Front (U1 / BEP H015) | mm | 225 |
| | Rear (U3 / BEP H016) | mm | 212 |
| Max. exterior height unladen | (BEP H001) | mm | 3955 |
| Max. exterior height, cab tilted, unladen | (O1 / BEP H061) | mm | 4558.00 |
| Cab height (unladen) | (O) | mm | 3866 |
| Distance from ground to lowest point at front of vehicle | Unladen (H0 / BEP H18) | mm | 330.00 |
| | Laden (H0 / BEP H18) | mm | 280.00 |
| Frame top height at front axle | Unladen (H1 / BEP H035) | mm | 959.00 |
| | Laden (H1 / BEP H036) | mm | 916.00 |
| Frame top height at drive axle | Unladen (H2 / BEP H037) | mm | 954 |
| | Laden (H2 / BEP H038) | mm | 931 |
| Frame top height at the rear of the frame | Unladen (HN) | mm | 954.00 |
| | Laden (HN) | mm | 935.00 |
| Centre of Gravity of vehicle | Unladen at Z (BEP H044) | mm | 954.00 |
| Side member height | (BEP H032) | mm | 266.00 |

## TOWING DEVICE

| Wheelbase | | mm | 3.800 |
|---|---|---|---|
| Distance between the front of the vehicle and the centre of the trailer coupling device | (BEP L073 + L016) | mm | 4540.00 |
| Distance between centre of last axle to centre of coupling device | | mm | |
| Fifth wheel height, from top of side member | (BEP H074 + H071) | mm | 166.00 |
| Fifth wheel height from ground | Unladen (BEP H076) | mm | 1121 |
| | Laden (BEP H078) | mm | 1095 |
| Swept Swing Clearance | (BEP L078) | mm | 2122.00 |
| Fifth wheel position | Max. (Ymax / BEP L075) | mm | 850 |
| Gross Vehicle Weight | at YMAX | Kg | 19000.00 |
| Gross Vehicle Weight, load on front axle(s) | at YMAX | Kg | 7500.00 |
| Gross Vehicle Weight, load on rear axle(s) | at YMAX | Kg | 11500.00 |
| King Pin Load | at YMAX | Kg | 10688.00 |
| King Pin Load on Front Axle(s) | at YMAX | Kg | 1695.00 |
| King Pin Load on RearAxle(s) | at YMAX | Kg | 8993.00 |
| Fifth wheel position | Min. (Ymin / BEP L077) | mm | 150 |
| Gross Vehicle Weight | at YMIN | Kg | 19000.00 |
| Gross Vehicle Weight, load on front axle(s) | at YMIN | Kg | 7500.00 |
| Gross Vehicle Weight, load on rear axle(s) | at YMIN | Kg | 11500.00 |

| | | | |
|---|---|---|---|
| King Pin Load | at YMIN | Kg | 10688.00 |
| King Pin Load on Front Axle(s) | at YMIN | Kg | 1695.00 |
| King Pin Load on RearAxle(s) | at YMIN | Kg | 8993.00 |
| Fifth wheel position | Manufacturer's recommendation (Y / BEP L076) | mm | 625 |
| Gross Vehicle Weight | in fifth wheel position recommended by manufacturer | Kg | 18618.00 |
| Gross Vehicle Weight, load on front axle(s) | in fifth wheel position recommended by manufacturer | Kg | 7500.00 |
| Gross Vehicle Weight, load on rear axle(s) | in fifth wheel position recommended by manufacturer | Kg | 11118.00 |
| King Pin Load | in fifth wheel position recommended by manufacturer | Kg | 10306.00 |
| King Pin Load on Front Axle(s) | in fifth wheel position recommended by manufacturer | Kg | 1695.00 |
| King Pin Load on RearAxle(s) | in fifth wheel position recommended by manufacturer | Kg | 8611.00 |
| Fifth wheel position | Intermediate 1 | mm | 575.00 |
| Gross Vehicle Weight | in intermediate fifth wheel position 1 | Kg | 18908.00 |
| Gross Vehicle Weight, load on front axle(s) | in intermediate fifth wheel position 1 | Kg | 7408.00 |
| Gross Vehicle Weight, load on rear axle(s) | in intermediate fifth wheel position 1 | Kg | 11500.00 |
| King Pin Load | in intermediate fifth wheel position 1 | Kg | 10596.00 |
| King Pin Load on Front Axle(s) | in intermediate fifth wheel position 1 | Kg | 1603.00 |
| King Pin Load on RearAxle(s) | in intermediate fifth wheel position 1 | Kg | 8993.00 |
| Fifth wheel position | Intermediate 2 | mm | 525.00 |
| Gross Vehicle Weight | in intermediate fifth wheel position 2 | Kg | 18747.00 |
| Gross Vehicle Weight, load on front axle(s) | in intermediate fifth wheel position 2 | Kg | 7247.00 |
| Gross Vehicle Weight, load on rear axle(s) | in intermediate fifth wheel position 2 | Kg | 11500.00 |
| King Pin Load | in intermediate fifth wheel position 2 | Kg | 10435.00 |
| King Pin Load on Front Axle(s) | in intermediate fifth wheel position 2 | Kg | 1442.00 |
| King Pin Load on RearAxle(s) | in intermediate fifth wheel position 2 | Kg | 8993.00 |
| Sliding fifth wheel | front fork | mm | |
| | rear yoke | mm | |

## WIDTHS

| Wheelbase | | mm | 3.800 |
|---|---|---|---|
| Max exterior cab width with rear view mirrors open | (BEP W001) | mm | 2534.00 |
| Max. cab width | (BEP W002) | mm | 2534 |
| Frame width | Front (BEP W035) | mm | 1080 |
| | Rear (BEP W036) | mm | 851 |
| Width at rear wheels | Rear axle 1 (V3 / BEP W003.1) | mm | 2499 |
| Track | Front (V1 / BEP W013.1) | mm | 2109 |
| | Rear 1 (V2 / BEP W013.2) | mm | 1837 |

## OTHER

| Wheelbase | | mm | 3.800 |
|---|---|---|---|
| Approach angle | (BEP H010) | ° | 13 |
| Ramp angle | (BEP H012) | ° | 10.90 |
| Departure angle | (BEP H011) | ° | 34.70 |
| Side member thickness | (BEP W034) | mm | 8.00 |
| Turning Radius | Overall (BEP W012) | mm | 7550.00 |
| | kerb to kerb | mm | 6893.00 |
| | interior | mm | 3118.00 |

## DTI 13 ENGINE

**Max. power: 382 kW from 1432 to 1800 rpm**
**Max. torque: 2550 Nm from 1100 rpm to 1432 rpm**
6-cylinder in-line diesel engine - Common rail high-pressure fuel-injection (2000 bar) - 24 valves - overhead camshaft, rear-mounted timing
High pressure provided by three pumps on injector bodies.
Bore 131 mm - stroke 158 mm - Capacity 12.8 L
Electronically-controlled fan
Turbocharger
Direction of rotation (seen from gearbox end): anti-clockwise
EEC EURO VI pollution control level
Compact post-treatment system (7th injector, catalytic converter, DPF, SCR)
Automatic regeneration of particulate filter
Soundproofing level complies with EEC standards (80dB)

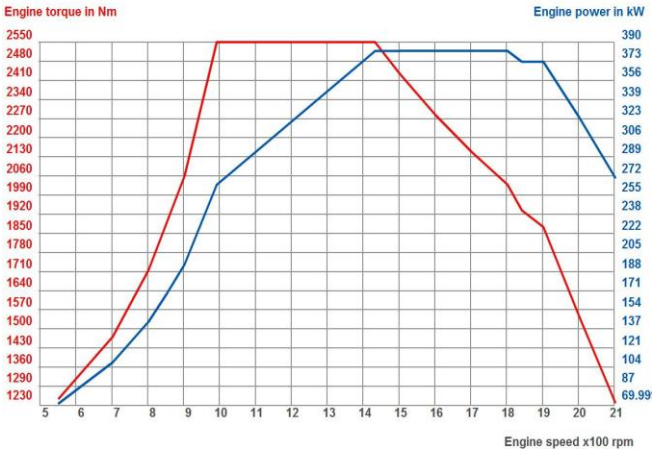


## ENGINE EQUIPMENT

*Power mode inhibited after passing the 'hard spot' of the accelerator pedal*
Partial gas recycling (semi-closed circuit)
Intake air preheating cold starting device
*Automatic engine cut-off (5 min)*
Electronic speed limiter (90 km/h).

## CLUTCH

Single-plate clutch, diameter 430 mm

## GEARBOX

*Gearshifting strategy optimised for FUEL ECO*

## RETARDER

OPTIBRAKE+ (power rating 382 kW at 2300 rpm), combination of the exhaust brake and valve compression braking, coupled to service brake

## POWER TAKE-OFFS

Without gearbox mounted PTO

## STEERING

*Hydraulic power steering, variable flow pump*
Steering ratio 20:1 - Steering wheel diameter 460 mm
Driving on the right

## AXLE

*Load capacity (technical max.) Front axle: 7.5 t.*

## REAR DRIVE AXLE

*P13170 single reduction final drive axle*
*Differential lock*
Rear loading capacity (technical max.): 13 t
Drive axle ratio: 2.64
Engine speed at 90 km/h: 1280 rpm

## WHEELS AND TYRES

*Dimension 315/70 R22,5 + 315/70 R22.5*
*Profile C. ECOPLUS HS3/HD3*
Steel disc wheels
Front wheel trims
*Spare wheel and tyre supplied loose.*

## BRAKING

### Service brake:

Braking system with two independent circuits
Ventilated disc brakes
Electronic management of air production by EACU (Electronic Air Control Unit):
Dryer cartridge optimised by preventive maintenance.
Twin-cylinder air compressor 900 l/min, 636 cm³
*Disengageable compressor*
Two line trailer braking system (ISO connections).
*Additional electric lead 15 pin, 2x7 pin.*

Trailer brake device at cab rear

### EBS:

Anti-lock braking system (ABS).
Anti-slip regulation (ASR).
Drag torque control (Torque control during downshifting).
Brake harmonisation of tractor and trailer (if equipped)
(Disc) brake pad wear compensation
Retarder and service brake linking
Differential engagement management (if equipped) at speeds <10 km/h (4x2)
Hill Start Aid
Braking performance warning
ESC (Electronic Stability Control) trajectory control and anti-rollover system
Coupling traction test
Emergency brake assist (EBA)
Emergency brake lights (EBL)

### Parking brake:

EPB (Electronic Parking Brake) automatic parking brake, immobilization provided by spring cylinders

### Brake adjustment:

Automatic brake lining slack compensation.

### Emergency brake:

Ensured by independence of main device circuits

## CAB

### Cab exterior:

All steel Cab, electro-zinc plated and cataphoretic paint treatment.
High Sleeper cab
*CAB PAINT COLOUR: BLUE ISRAEL*
Full paint
Silver front face finish
Aerodynamic dirt deflectors on the headlamps
4-point cab air suspension with ride-height control system
Four side storage compartments of which one is accessible from inside the cab
2 heated, remote control rear view mirrors.
2 wide angle rearview mirrors.
Kerb view mirror.
Rear view mirrors for bodywork up to 2.55 m wide
Fold-back front view mirror
Rearview mirrors silver finish
Air horn
Spray suppression on front wings
*Side deflectors (2 opening panels)*
*Roof deflector*
Door extension
External sun visor.

### Cab interior:

*Ultimate Bronze finish*
Ultimate roof console, de luxe coating, 4 storage compartments with doors including 1 with key lock, 1 storage space with net, folding mirror, 4 ISO modules
Electric interior sun blind on windscreen, manual blinds on driver and passenger side windows
Mono CD player, MP3/WMA format-compatible
Double tuner for immediate radio station list update
Steering column-mounted radio controls
Jack (3.5 mm) and USB inputs for MP3 player
Hands-free interface for mobile telephone (Bluetooth technology), Audio streaming, steering wheel controls, microphone in the roof console, audio playback through vehicle speakers
Information on the main information display
TV aerial pre-equipment
CB pre-equipment.
Dual CAN digital tachograph
Offset 24 V socket
Electrically operated roof hatch with controls by driver and in relaxing area.
Mosquito net on air vent
Synthetic floor mat
Air-suspended driver's seat with fitted seat belt, adjustable lumbar support, adjustable seat cushion extension, heated seat (0-1-2)
*Two driver's armrests*
Safety belt warning.
Air-suspended passenger seat with seatbelt.
Passenger armrest
Cloth seat trim.
Performance lower bunk
*Ultimate upper bunk, transformable into storage with ladder*
Air supply to the rear of the driver's seat
Grand volume drawer under bunk
Cab interior lighting management rotary control (Activity/Rest/Night driving), brightness adjustment
Reading lamps on overhead console
LED direct cab lighting
LED indirect cab lighting
Red night lighting in 3 rows on the overhead console and on the dashboard
Cab lighting time-delay.
Curtains around cab. Curtain separating driving position from rest area.

Bunk restraint.
Articulated LED lamps in bunk area
Remote control for all comfort functions in bunk area with integrated display
12 and 24 V sockets on bunk
Provision for 50A max. electrical power supply
*40L refrigerator in central storage under bench, quiet with thermostat and vehicle battery management*
2 storage boxes under bunk, one accessible from interior and exterior
One-touch electric windows
Cab independent night heater air/air (4 kW)
Electronically regulated comfort air conditioning with compressor optimisation
Cab air filtration
Handbook in Czech.
4 loudspeakers and 2 tweeters

## Steering wheel equipment:

Ultimate leather steering wheel with cruise control and telephone control
OPTIDRIVER control
OPTIBRAKE and retarder control on right-hand side
Easy Access steering column adjustable in 3 directions
Removable writing board on steering wheel

## Instrument panel:

Panoramic dashboard
7" HD colour information display
*HD secondary touch screen*
12 V + 24 V socket on dashboard, for accessories.
Starting inhibitor controlled by transponder key.
Remote control central door locking with folding key
*ECO Cruise control with Optiroll*

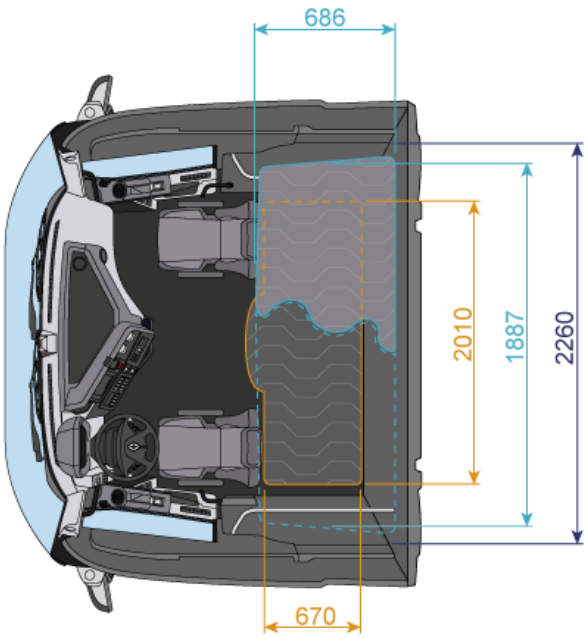


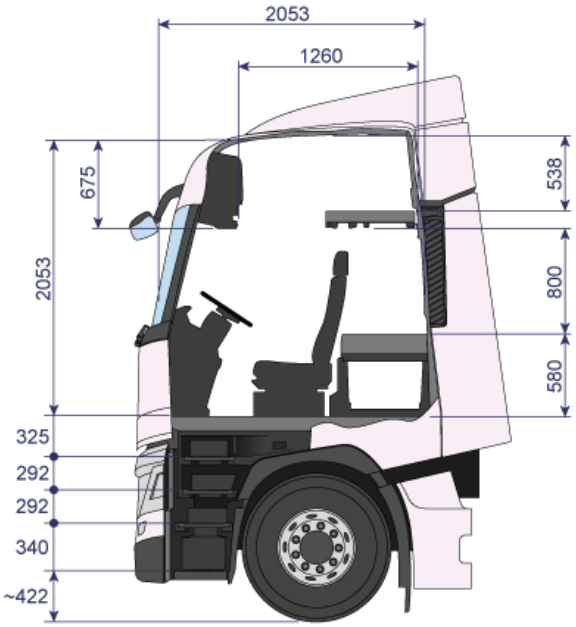


## ELECTRONIC EQUIPMENT:

SAE cab socket for vehicle data extraction (Optifuel Infomax).
*Toll Collect pre-equipment*
*Provision for Optifleet Link + Renault Trucks Truck Navigation + TESP-TN (Telematics Extended Service Platform) electronic unit, updates included for 4 years, to be performed in the dealership after each full year of use*
Lane Departure Warning System (LDWS)

Automatic emergency braking system
English and Czech language display
Additional language (Slovak)

## ELECTRICAL EQUIPMENT

Battery capacity: 225 Ah
Batteries mounted side by side on LH side.
Battery cut-out remote control
Electrical circuit automatically goes to standby
Battery charge indicator
Alternator : 150 amp capacity.

## CHASSIS

Removable front towing cap.
Front under-run protection.
Closing cross member with pre-drilling for towing yoke
Low fifth wheel mounting H=16 mm
Jost JSK 36D (sheet metal), 2" sheet metal fifth wheel, D 152 kN
*Fifth wheel position: Y = 625 mm*
*Side fairings with extensions*
Rear manwalk.
Rear wings with anti-spray
Wings fitted in standard position.
2 foldaway wheel chocks
Side exhaust.

## BUMPER - STEPS AND LIGHTING

3-part plastic bumper
Retractable windscreen access step in radiator grille
Access to driving position by 4 steps
Step lighting.
Metallic door sills
Electrical headlamp levelling control.
LED day running lights
Provision for lighting rail on front end
Coupling light (70W).
Front fog lights.
Halogen headlights
Roof beacon pre-equipment

## SUSPENSION

### Front suspension

2-leaf front leaf springs
Stabiliser bar

### Rear suspension:

Rear air suspension.
Suspension remote control

## FUEL TANK

*Main and additional aluminium tanks.*
*Main fuel tank: 405 litres capacity D710 profile mounted on right*
*Main fuel tank: 610 litres capacity D710 profile mounted on left*
Fuel filter heater
Reheating and insulation of fuel circuit
*Anti-siphoning device*
Heavy duty sedimenter and prefilter (R90).Bleed control on dashboard.

## AdBlue

*100-litre AdBlue tank*
*Tank on the right*

## STANDARD EQUIPMENT

Tool kit.
*Jack 15t*
Warning triangle.
Windscreen washer bottle capacity: 12L

## BODYWORK

Side marker lights.
Bodybuilder connection interface

## SERVICE

### Optifleet:

*English keyboard*
*Optifleet Check: technical data reports for fuel consumption monitoring by vehicle and by driver, 6-month prepaid subscription*
*Optifleet Map: vehicle geolocation, geofencing and route analysis, 6-month prepaid subscription*

## GEARBOX RATIOS

| 1 | 2 | 3 | 4 | 5 | 6 | 7 | 8 | 9 | 10 | 11 | 12 |
|---|---|---|---|---|---|---|---|---|---|---|---|

| | | | | | | | | | | | |
|---|---|---|---|---|---|---|---|---|---|---|---|
| 14.94 | 11.73 | 9.04 | 7.09 | 5.54 | 4.35 | 3.44 | 2.70 | 2.08 | 1.63 | 1.27 | 1.00 |

*The manufacturer reserves the right to modify the specifications above without prior notice.*
*Non contractual document.*
*For further assistance please contact Product Applications at Renault Trucks UK Limited, Houghton Hall Business Park, Porz Avenue, Dunstable, LU5 5FT. Telephone +44 (0)1582 471122.*